THIS DRAWING IS UNPUBLISHED
RELEASED FOR PUBLICATION 2018
© COPYRIGHT 2018 BY - TE CONNECTIVITY
ALL RIGHTS RESERVED.

REVISIONS

P	LTR	DESCRIPTION	DATE	DWN	APVD
	A1	REVISED PER PCN E-18-015129	13DEC2018	SS	DM
	A2	DRAWING UPDATED	12MAR2024	RK	CB

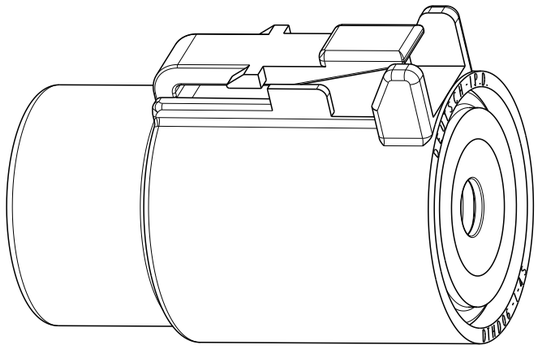

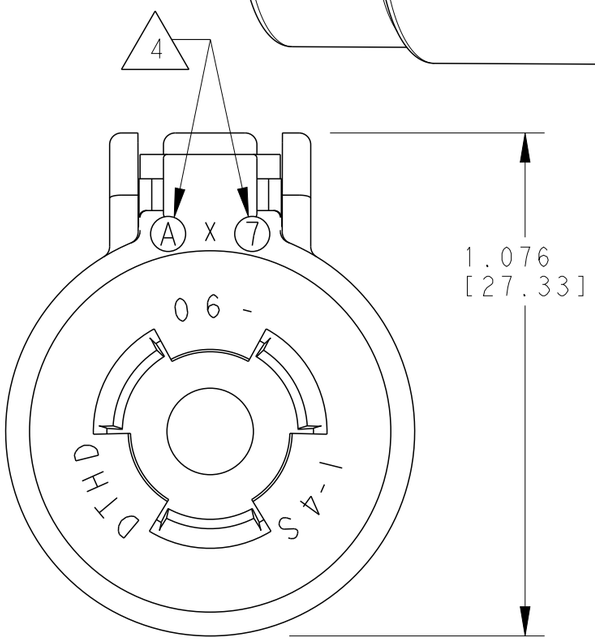

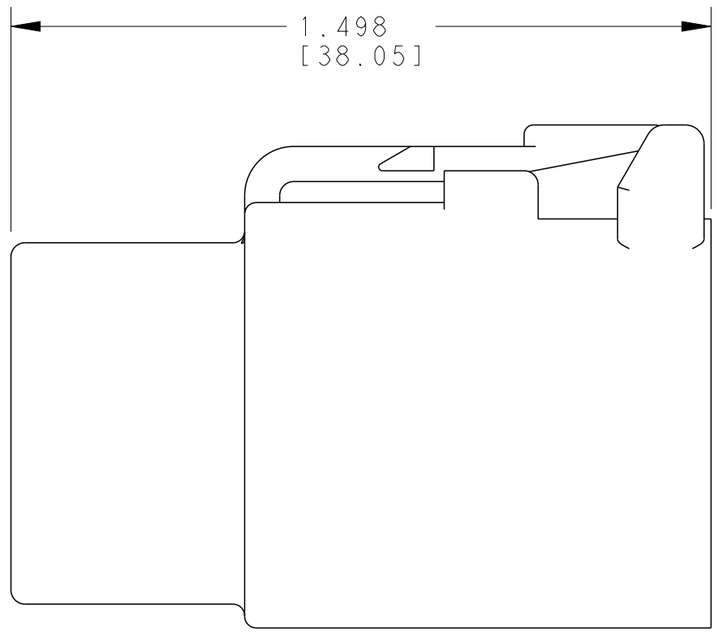

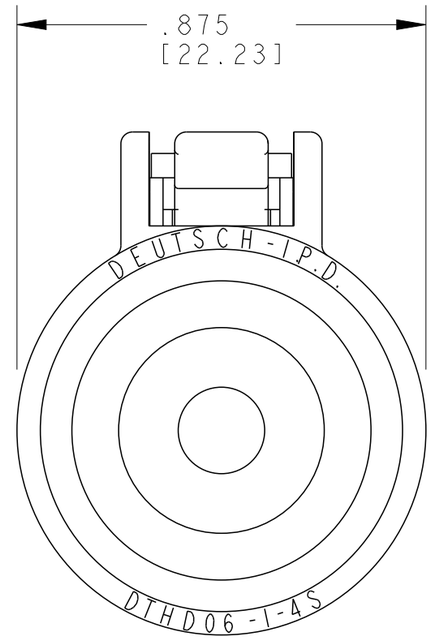

TE INTERNAL PN	DEUTSCH PN
DTHD06-1-4S	DTHD06-1-4S

WIRE INSULATION DIA		
CONTACT SIZE	MINIMUM O.D.	MAXIMUM O.D.
4	.261 [6.63]	.420 [10.67]

4 DATE CODE: MONTH IS REPRESENTED BY SEQUENTIAL ALPHA CHARACTERS. EX: A = JANUARY. YEAR IS REPRESENTED BY LAST NUMERIC DIGIT. EX: 7 = 2007.

3 MATERIAL: PLUG: PEI (BLACK); INTERFACE SEAL: VMQ (RED-ORANGE)

2. THIS PLUG MATES WITH DTHD04-1-4P-XXXX RECEPTACLE. (XXXX = ALL MODIFICATIONS)

1. FOR CONTACT AND WIRE PERFORMANCE AND APLICATION CHARACTERISTIC SEE CUSTOMER DRAWING 0425-015-0000.

NOTES: UNLESS OTHERWISE SPECIFIED.

THIS DRAWING IS A CONTROLLED DOCUMENT.

DIMENSIONS: INCHES[mm]

TOLERANCES UNLESS OTHERWISE SPECIFIED:
0 PLC ±-
1 PLC ±-
2 PLC ±-
3 PLC ±.025 [0.64]
4 PLC ±-
ANGLES ±0°30'0"

MATERIAL 3

FINISH - -

DWN	V.TONSA	09JUN2004
CHK	D.MEYER	10JUN2004
APVD	D.MEYER	21JUN2004
PRODUCT SPEC	108-151020	
APPLICATION SPEC	114-151020	
WEIGHT	11 g	

TE Connectivity

NAME PLUG #4 HD CONTACT
DTHD SERIES
COLOR: BLACK

SIZE	CAGE CODE	DRAWING NO	RESTRICTED TO
A3	4AFU8	C-DTHD06-1-4S	

CUSTOMER DRAWING | SCALE 3:1 | SHEET 1 OF 1 | REV A2

1470-19 (3/13)