| MAT'L NO (STRIP) | MAT'L NO (LOOSE PC) | AWG SIZE | FINISH | "A" | "B" | "C" | "D" |
|---|---|---|---|---|---|---|---|
| 194200001 | 194200009 | 16-14 | PREPLATED TIN 75µ MIN THICK OVER NICKEL FLASH | .235 (5.97) | .182 (4.62) | .141 (3.58) | .155 (3.94) |
| 194200002 | 194200010 | 22-18 | | .179 (4.55) | .143 (3.63) | .114 (2.90) | .106 (2.69) |
| 194200003 | 194200011 | 16-14 | SELECT HARD GOLD 30µ MIN THICK WITH SELECT TIN 100 THICK OVER NICKEL 50 MIN OVERALL | .235 (5.97) | .182 (4.62) | .141 (3.58) | .155 (3.94) |
| 194200004 | 194200012 | 22-18 | | .179 (4.55) | .143 (3.63) | .114 (2.90) | .106 (2.69) |

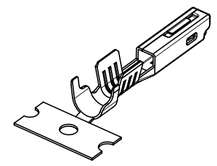

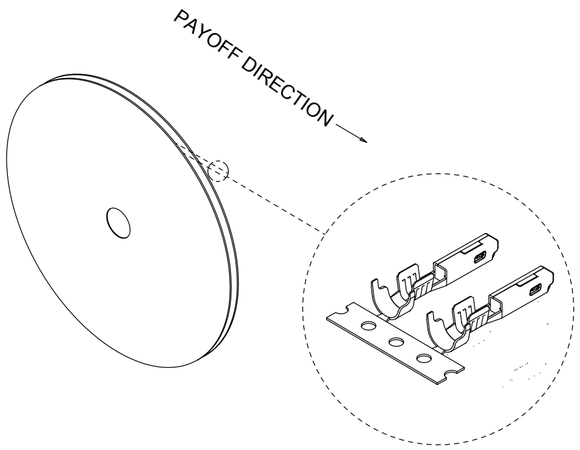


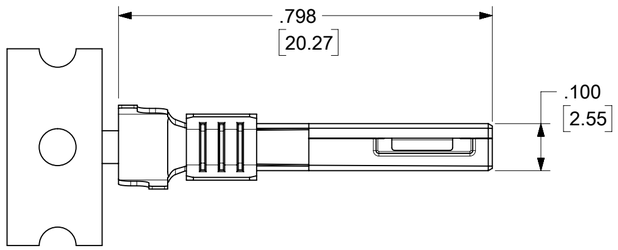


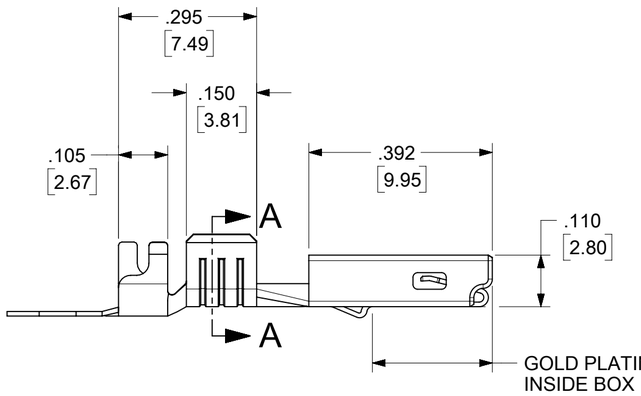


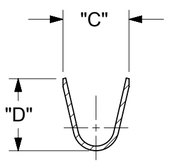


SECTION A-A

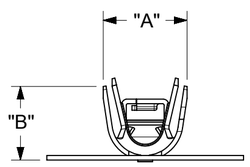


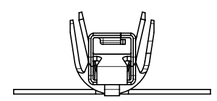

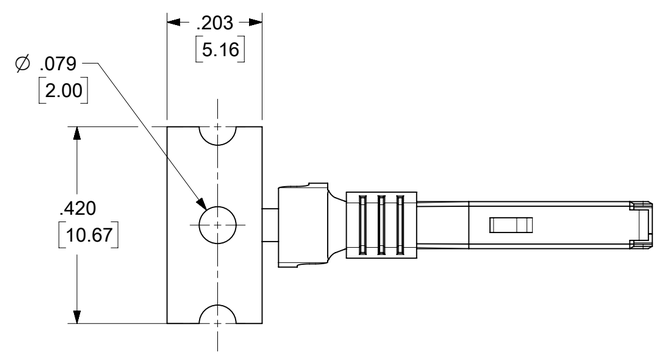


NOTES:
1. MATERIAL: COPPER ALLOY .0098/0.249 THK.
2. FINISH: SEE CHART.
3. TERMINALS FOR USE WITH 19418XXXX RECEPTACLE HOUSING ASSEMBLY.
4. STRIP TERMINALS ARE REELED AS SHOWN ABOVE ON 24" REELS, 4000 PARTS PER REEL.
5. LOOSE TERMINALS ARE BULK PACKAGED IN QUANTITIES OF 400.
6. APPLICATION TOOLING AND CRIMP SPECIFICATIONS: 63865-6200 (14-16 AWG), 63865-6300 (14-16 AWG), 63811-4000 (HAND TOOL).

THIS DRAWING CONTAINS INFORMATION THAT IS PROPRIETARY TO MOLEX ELECTRONIC TECHNOLOGIES, LLC AND SHOULD NOT BE USED WITHOUT WRITTEN PERMISSION

FUNCTIONAL SYMBOLS: FA = 0; FC = 0; FP = 0
DIVISIONAL SYMBOLS

DIMENSION UNITS: INCH/MM
SCALE: 4:1

GENERAL TOLERANCES (UNLESS SPECIFIED)

| | MM | INCH |
|---|---|---|
| 4 PLACES | ± | ± |
| 3 PLACES | ± | ± 0.01 |
| 2 PLACES | ± 0.25 | ± 0.02 |
| 1 PLACE | ± 0.5 | ± |
| 0 PLACES | ± | ± |
| ANGULAR TOL | ± 3.0 ° | |

DRAFT WHERE APPLICABLE MUST REMAIN WITHIN DIMENSIONS

CURRENT REV DESC: REVISED TO LATEST MODEL

EC NO: 751759
DRWN: DEANNM1 2024/02/28
CHK'D: ETHRODAHL 2024/04/18
APPR: ETHRODAHL 2024/04/18

INITIAL REVISION:
DRWN: JPAWLICK 2003/05/12
APPR: RDEROSS 2003/05/13

THIRD ANGLE PROJECTION | DRAWING: C-SIZE | SERIES: 19420

molex

FEMALE RECEPTACLE
TERMINAL, 22-18 & 16-14 AWG, .059/1.50X.031/0.79

PRODUCT CUSTOMER DRAWING

| DOCUMENT NUMBER | DOC TYPE | DOC PART | REVISION |
|---|---|---|---|
| SD-19420-001 | PSD | 001 | D |

| MATERIAL NUMBER | CUSTOMER | SHEET NUMBER |
|---|---|---|
| | GENERAL MARKET | 1 OF 1 |

| DOCUMENT STATUS | P1 | RELEASE DATE | 2024/04/18 16:58:40 |
|---|---|---|---|

FORMAT: Eng-tega-master-B-prod-C
REVISION: E1
DATE: 2021/05/21