DWG STATUS					ZONE	REVISION HISTORY	AUTH	DR	APVD 1	APVD 2
DATE	STG	REV	N/P	CHG						
17JN16	R	01	--			INITIAL ISSUE		P.BAL	A.ELM	A.ELM

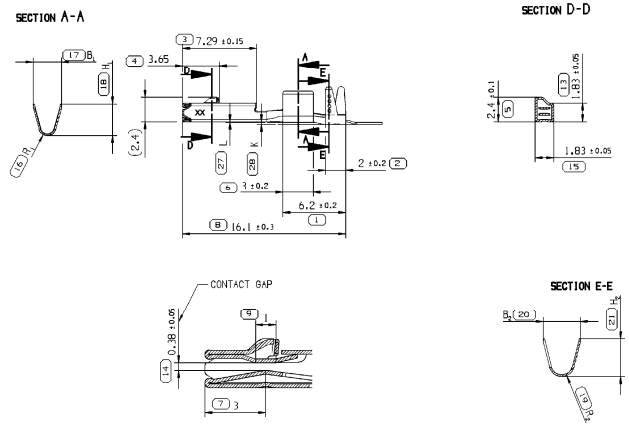

NOTES

1. RECOMMENDED MATING BLADE THICKNESS 0.6±0.03 mm
   RECOMMENDED MATING BLADE WIDTH NOT TO EXCEED 1.2 mm
   AND NO LESS THAN 0.61 mm
2. DO NOT PROBE, TEST OR OTHERWISE CONTACT THE INTERIOR REGION (THE SPRING OR ANY MOVING PART) OF THIS TERMINAL. SEVERE DAMAGE CAN OCCUR, COMPROMISING THE PERFORMANCE OF THE ELECTRICAL INTERFACE.
3. TERMINAL MAX. ENGAGE FORCE 1.8N WHEN MATING WITH
   0.6mm THICK BY 1.1mm WIDE
   HARDENED STEEL BLADE WITH SURFACE FINISH OF 0.1 TO 0.2 µm
4. ( ) DIMENSION FOR INFORMATION ONLY
5. CRIMPING SPEC DELPHI:16-006

NOMBRE DE DIMENSIONS NUMEROTEES *QUANTITY OF NUMBERING DIMENSIONS*	36
Numero non utilise *Numbering not used*	22, 25
Dernier numero utilise *Last number used*	37

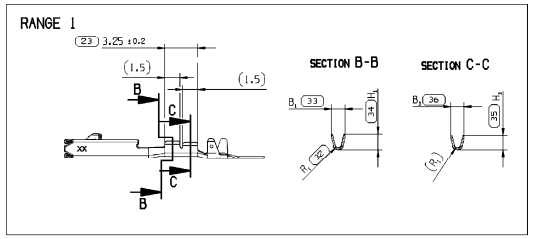

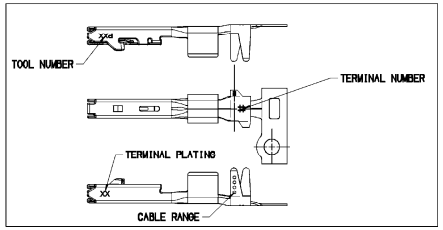

PART NUMBER	IND. REV.	GAMME SERTISSAGE *CRIMPING RANGE* (mm²)	Ø ISOLANT *Ø INSULATION* (mm)	CABLE RANGE	RANGE	POIDS *WEIGHT* (g)	MATIERE *MATERIAL*	REVETEMENT *PLATING*	EPAISSEUR *THICKNESS* (mm)	B_1 ±0.2 (mm)	B_2 ±0.3 (mm)	B_3 ±0.2 (mm)	H_1 ±0.2 (mm)	H_2 ±0.2 (mm)	H_3 ±0.2 (mm)	R_1 ±0.2 (mm)	R_2 ±0.2 (mm)	K (mm)	L (mm)
33265283	01	0.13-0.22	0.85-1.25	○	1	0.158	Cu Ni Si	HOT DIP TIN (1.2-3.5 µm)	0.19	1.38	2.00	1.28	1.53	2.00	1.42	0.28	0.53	-0.05	+0.15
33265287	01	0.35-0.50	1.25-1.70	○○	2	0.169				1.79	3.03	/	1.95	3.02	/	0.40	0.83	-0.05	+0.15
33265290	01	0.75-1.00	1.60-2.15	○○○	3	0.179				2.44	3.45	/	2.63	3.44	/	0.59	0.96	-0.05	+0.15
33265291	01	1.25-1.50	2.00-2.40	○○○○	4	0.188				2.80	3.70	/	3.08	3.69	/	0.65	1.04	-0.25	-0.05

A — LINE DRAWN THROUGH A PART NUMBER INDICATES THAT PHYSICAL PARTS ARE NOT AVAILABLE FOR ORDERING.

PART NUMBERS THAT DO NOT HAVE A LINE PRESENT INDICATE THAT PHYSICAL PARTS ARE AVAILABLE FOR ORDERING.

CONTACT DELPHI SALES TO ASSURE AVAILABILITY OF PARTS.

R 0.2 MAX — H 0.1 MAX

SHARP CORNER TOLERANCE

DIMENSIONAL RANGE (MM)		CHART D
FROM	0	>12
TO	12	

TOLERANCE UNLESS OTHERWISE SPECIFIED ±0.1 ±0.2 ANGULAR TOLERANCE ±2°

COTES A VERIFIER / COTES POUR INFO / COTES THEORETIQUES

SCALE / ECHELLE 2:1

RANGE 2 TO 4 — RANGE 1

DWG TYP: CUSTOMER PART DRAWING

WEIGHT (GR): SEE TABLE

VOLUME (CM³)

ROUTING

DISTR CODE

UNLESS OTHERWISE SPECIFIED

GENERAL TOLERANCES ACCORDING TO: SEE CHART

GD&T ACCORDING TO: ISO 1101

REFERENCE

FIRST ANGLE PROJECTION

DO NOT SCALE — USE MATH DATA — INX

DELPHI

DELPHI PACKARD ELECTRICAL/ELECTRONIC ARCHITECTURE
Epernon, France

COPYRIGHT 2016 DELPHI CORPORATION AND/OR ITS AFFILIATES.
ALL RIGHTS RESERVED.

THIS DRAWING IS THE PROPERTY OF DELPHI CORPORATION AND CONTAINS DELPHI CONFIDENTIAL INFORMATION. THE REPRODUCTION, DISTRIBUTION AND UTILIZATION OF THIS DOCUMENT OR ITS RELATED CAD MATH DATA, AS WELL AS COMMUNICATION OF ANY CONTENT TO OTHERS, WITHOUT EXPRESS AUTHORIZATION, IS PROHIBITED.

CE PLAN EST LE PROPRIETE DE DELPHI CORPORATION ET CONTIENT DES INFORMATIONS DELPHI CONFIDENTIELLES. LA REPRODUCTION, LA DISTRIBUTION ET L'UTILISATION DE CE DOCUMENT OU DE SES DONNEES MATHEMATIQUES CAO, AINSI QUE LA COMMUNICATION DE TOUT CONTENU A AUTRUI SANS AUTORISATION EXPRESSE EST INTERDITE.

		DATE
DR	P.BALAJI	17JN16
APVD1	A.ELMANFALOUTI	17JN16
APVD2		
APVD3		
APVD4		
APVD5		

SUBSTANCES OF CONCERN AND RECYCLED CONTENT PER DELPHI (DP49001) MATIERES PROSCRITES ET CONTENU RECYCLABLE SELON DELPHI (DP49001).

MATERIAL: SEE CHART / VOIR TABLEAU

DRAWING NAME: FEMALE TERMINAL OCS 120

DRAWING NUMBER: 33265292

SIZE	SCALE	FRAME NO	SHEET NO	STG	REV	N/P
A1	5:1	1 OF 1	1 OF 1	R	01	--

CONTROLLED DOCUMENTS ARE ONLY AVAILABLE ON THE SERVER