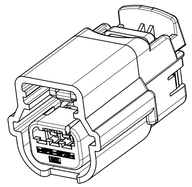
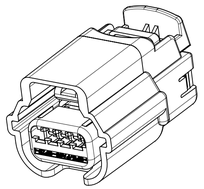


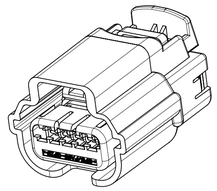
1X2



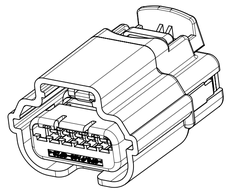
1X3



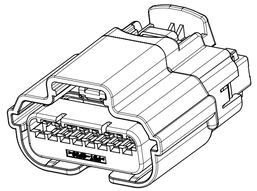
1X4



1X5



1X6



1X8

TABLE OF CONTENTS

SHEET NO.	SHEET DESCRIPTION
1	NOTES AND BOM
2	CONNECTOR ASSEMBLY WITHOUT CLIPSLOT
3	CONNECTOR ASSEMBLY WITH CLIPSLOT
4-5	KEY CONFIGURATIONS
6-9	BOM

DRAWING INFORMATION

DESCRIPTION	DRAWING NO.
PRODUCT SPECIFICATION	PS-31402-000
	FOR 31404 1X8 REFER TO PS-31404-001-1X8
PACKAGING	PK-31300-256
SALES DRAWING	SD-31402-211
	FOR 31404 1X8 REFER TO SD-31404-811
TEST SUMMARY	FOR 1X2 REFER TO TS-31402-001-1X2
	FOR 1X3 REFER TO TS-31402-001-1X3
	FOR 1X6 REFER TO TS-31402-001-1X6
	FOR 31404 1X8 REFER TO TS-31404-001-1X8

MATING INTERFACE DRAWING

DESCRIPTION	INTERFACE DEFINITION
1X2	*064-S-002-1-Z02
1X3	*064-S-003-1-Z01
1X4	*064-S-004-1-Z02
1X5	*064-S-005-1-Z02
1X6	*064-S-006-1-Z02
1X8	*064-S-008-1-Z02

NOTES: VALID UNLESS OTHERWISE SPECIFIED

1. GENERAL:

a. APPLICATION SPECIFICATION SEE: AS-31402-000
-CONTAINS: SEE AS CONTENT
-DESIGNED TO MATE WITH DEVICE OR CONNECTOR AS SPECIFIED IN THE MATING INTERFACE DRAWINGS CHART.
*DENOTES DRAWINGS THAT CAN BE ACCESSED AT <http://ewcap.uscarteams.org/>.
-ASSEMBLY SHIPPED WITH PLR IN PRE-LOCK POSITION (SEE PLR PRE-LOCK VIEW ON SHEET 2 SECTION A-A).

b. PRODUCT RELATED DRAWING REFER TO DRAWING INFORMATION CHART

c. TPA'S MAY BECOME SEATED DURING TRANSIT. IF THIS OCCURS, TPA'S SHOULD BE MOVED TO THE PRE-LOCKED POSITION PRIOR TO FEMALE TERMINAL INSTALLATION. REFERENCE PRODUCT SPECIFICATION: PS-34646-001

d. PARTS MUST BE IN COMPLIANCE TO MOLEX CHEMICAL SUBSTANCES FOR PRODUCTS AND PACKAGING SPECIFICATION: QEHS-699000-301

e. DATA MUST BE SUBMITTED UNDER THE MOLEX PART NUMBER TO IMDS (COMPANY ID#13255)

f. SYSTEM EXCEPT SERIES 31404 1X8 CIRCUIT TO BE USED WITH OUTSIDE WIRE DIAMETERS RANGING FROM 1.20MM TO 2.06MM WITHIN RANGE OF:
- SAE 22 AWG TO 18 AWG PER ESB-M1L123-A2
- ISO 0.35MM² TO 0.75MM² PER GMW15626 AND ES-AU5T-1A348-AA

g. POLARIZATION FEATURE EFFECTIVENESS PER USCAR-2 PARAGRAPH 5.4.4 IS REDUCED WHEN TESTING ALL POLARIZATION OPTIONS: 100N MIN.

h. SEE SHEET #3 FOR CONNECTOR ASSEMBLY WITH CLIPSLOP

i. FOR CLIPSSLOT CONNECTOR: CLIP OVERHANGS CONNECTOR, PLEASE CHECK APPLICATION (COULD CAUSE WIRE CHAFING)-SHORTER CLIP IS A RECOMMENDATION.

2. DESIGN - GEOMETRY:

a. THE 3-D CAD DATA IS BASIC (WITHOUT TOLERANCE) AND MASTER FOR THIS PART WITH THE EXCEPTION OF UNDERLINED DIMENSIONS. DIMENSIONAL INFORMATION NOT SHOWN ON THIS DRAWING IS DEFINED BY THE DATA FILE AT ITS LATEST REVISION.

b. GEOMETRIC DIMENSIONS AND TOLERANCES PER ASME Y14.5M-2009

c. EDGES AND UNDIMENSIONED DETAILS PER ISO13715

d. CORNERS SHOWN AS SHARP TO BE R 0.2 MAX.

e. LETTERING SHALL BE 0.15 MAX RAISED IN 0.25 MAX RECESS PAD. THIS INCLUDES RECYCLING CODE, CAVITY ID, VENDOR IDENTIFICATION, AND CUSTOMER MATERIAL NUMBER.

f. VISUAL DEFECTS SHALL MEET COSMETIC STANDARD PS-45499-002 (Class B).

g. DATE CODE: FIRST TWO DIGITS ARE THE CALENDAR YEAR (EXAMPLE: 04 = 2004). THIRD THROUGH 5TH DIGIT DAY # OF THE CALENDAR YEAR (EXAMPLE: FEB. 3RD = '034').

PART NUMBER LEGEND
CONNECTOR ASSEMBLY

3140X-XXXX

SEAL PLUG CONFIGURATION (AS MOLDED)
0 - ALL CIRCUITS OPEN
1-9 SEE CHART

CPA OPTION
0 OR 2 - WITHOUT CPA
1 OR 3 - WITH CPA
4 - WITHOUT CPA, WITH CLIPSLOT
5 - WITH CPA, WITH CLIPSLOT

USCAR POLARIZATION OPTION
1 - POLARIZATION OPTION A
2 - POLARIZATION OPTION B
3 - POLARIZATION OPTION C
4 - POLARIZATION OPTION D
5 - POLARIZATION OPTION B, BLACK
6 - POLARIZATION OPTION C, BLACK
7 - POLARIZATION OPTION D, BLACK
8 - POLARIZATION OPTION C, NATURAL
9 - POLARIZATION OPTION D, GRAY
0 - POLARIZATION OPTION D, DARK GRAY

CIRCUIT SIZE 2, 3, 4, 5, 6 & 8
(T) 6 - CIRCUIT SIZE 6, WITH 31412-6500 OR 31412-6501 RING SEAL (FOR 31402 AND 31403 SERIES) WITH 31412-6500 RING SEAL (FOR 31404 SERIES)
(T1) 7 - CIRCUIT SIZE 6, WITH 31412-6501 RING SEAL (FOR 31404 SERIES)

TERMINAL OPTION
(L) 2 - TYCO/MOLEX GET 0.64
3 - MOLEX 0.64
4 - YAZAKI KAIZEN 0.64/TE GEN Y 0.64/JST AIT 0.64

U8	ADD P/N: 31403-3102 & 31403-3112
U7	ADD P/N: 31402-6134 to 31402-6124
U6	ADD P/N: 31402-6001 to 31402-6006 31403-6001 to 31403-6006 31404-6001 to 31404-6012
U5	ADD P/N: 31402-6122/6132/6123/6133, 31403-6105/6115/6502/6512
U4	DELETE P/N 31402-2120/2130
U3	DELETE OBSOLETE P/NS (31404-6XXX) DELETE P/N WITH GREEN AND BROWN COLOR
U2	ADD P/N: 31404-7126, 31404-7136
U1	ADD P/N: 31402-3115, 31402-3105
U	OBSOLETE P/N 31404-6XXX
T8	ADD P/N: 31404-7804, 31404-7814
T7	CHANGE STATUS FROM "TOOLED" TO "SALEABLE" ADD P/N 31404-7135/7125, 31404-7216/7206, 31404-7913/7903
T6	ADD P/N: 31404-7124, 31404-7134, 31404-7205, 31404-7215, 31404-7803, 31404-7813
T5	ADD P/N: 31404-7123; 31404-7133; 31404-7902; 31404-7912
T4	ADD P/N:31402-2120,31402-2130,31402-3104,31402-3114,31402-6201,31402-6211, 31402-6301,31402-6311,31402-6401,31402-6411,31402-6501,31402-6511, 31402-6601,31402-6611,31402-6701,31402-6711,31403-6201,31403-6211, 31403-6301,31403-6311,31403-6401,31403-6411,31403-6501,31403-6511, 31403-6601,31403-6611,31403-6701,31403-6711,31404-6201,31404-6211
T2	UPDATE BOM INFORMATION ON SHEET 9
T1	DELETE 31402/31403-7*** P/N
T	ADD P/N 3140*-7XXXX FOR 1X6 WITH 31412-6501 RING SEAL VERSION ON SHEET 9
S	ADD P/N: 31402-6131; 31402-6121
R	ADD P/N: 31404-3112; 31404-3102
P	ADD P/N: 31403-3132; 31403-3122
M	ADD P/N: 31402-6118; 31402-6108
REV	REV DESCRIPTION

THIS DRAWING CONTAINS INFORMATION THAT IS PROPRIETARY TO MOLEX ELECTRONIC TECHNOLOGIES, LLC AND SHOULD NOT BE USED WITHOUT WRITTEN PERMISSION

FUNCTIONAL SYMBOLS
FA = 0
FC = 0
FP = 0

DIVISIONAL SYMBOLS

DIMENSION UNITS	SCALE
MM	1:1

GENERAL TOLERANCES (UNLESS SPECIFIED)

ANGULAR TOL	±	3 °
4 PLACES	±	0
3 PLACES	±	0
2 PLACES	±	0.13
1 PLACE	±	0.3
0 PLACES	±	0

DRAFT WHERE APPLICABLE MUST REMAIN WITHIN DIMENSIONS

CURRENT REV DESC: MX64 - 1x3 CVP PNs added

EC NO: CO-000021437
DRWN: Mario Gazca 07-Oct-2024
CHK'D: MAURICIO RUIZ 27-Feb-2025
APPR: Brittney Cotter 12-Mar-2025

INITIAL REVISION:
DRWN: RFC_PLMIMP 01-Mar-2004
APPR: PBERG 30-Sep-2004

THIRD ANGLE PROJECTION | DRAWING: D-SIZE | SERIES: 31402

molex

0.64 USCAR CONNECTOR
SEALED SINGLE ROW ASSEMBLY

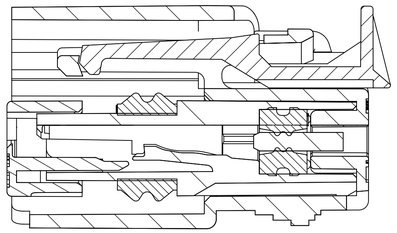
PRODUCT CUSTOMER DRAWING

DOCUMENT NUMBER	DOC TYPE	DOC PART	REVISION
SD-31402-211	PSD	001	U8

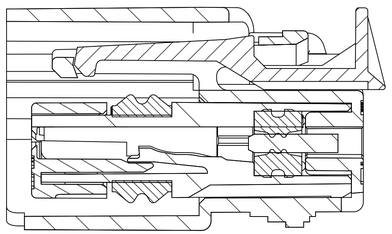
MATERIAL NUMBER	CUSTOMER	SHEET NUMBER
	GENERAL MARKET	1 OF 8

DOCUMENT STATUS	Production	RELEASE DATE	12-Mar-2025 02:34:41

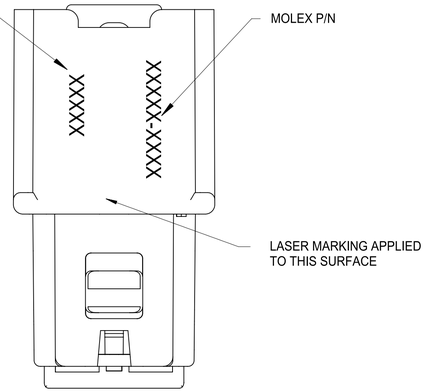
CONNECTOR ASSEMBLY WITHOUT CLIPSLOT



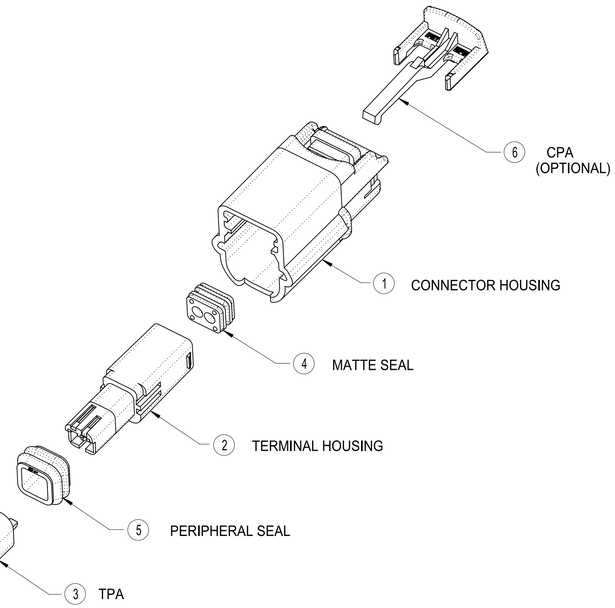
SECTION A-A
TPA SHOWN IN AS-SHIPPED
PRE-LOCKED POSITION
SEE NOTE 1c

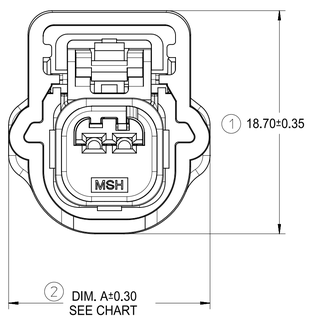


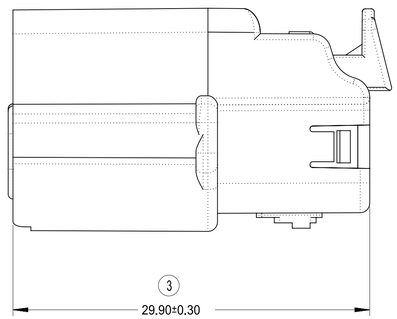
SECTION A-A
TPA SHOWN IN FINAL
LOCKED POSITION



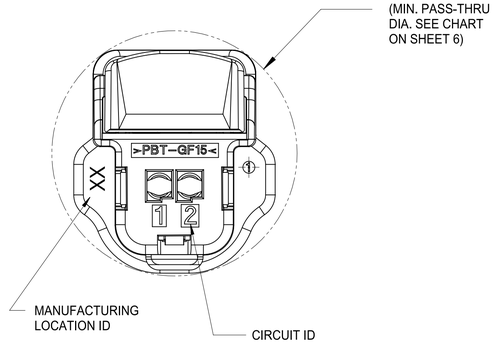
BOTTOM VIEW







RIGHT SIDE VIEW



BACK VIEW

ITEM	DESCRIPTION	COLOR	MATERIAL
1	CONNECTOR HOUSING	SEE CHART	PBT GF15
2	TERMINAL HOUSING	BLACK	SPS/PA66 GF30
3	TPA	NATURAL	SPS/PA66 GF20
4	MATTE SEAL	SEE CHART	SILICONE RUBBER
5	PERIPHERAL SEAL	SEE CHART	SILICONE RUBBER
6	CPA - OPTIONAL	RED	PBT GF30

THIS DRAWING CONTAINS INFORMATION THAT IS PROPRIETARY TO MOLEX ELECTRONIC TECHNOLOGIES, LLC AND SHOULD NOT BE USED WITHOUT WRITTEN PERMISSION

FUNCTIONAL SYMBOLS
FA = 0
FC = 0
FP = 0
DIVISIONAL SYMBOLS

DIMENSION UNITS: MM
SCALE: 1:1

GENERAL TOLERANCES (UNLESS SPECIFIED)

ANGULAR TOL	±	3 °
4 PLACES	±	0
3 PLACES	±	0
2 PLACES	±	0.13
1 PLACE	±	0.3
0 PLACES	±	0

DRAFT WHERE APPLICABLE MUST REMAIN WITHIN DIMENSIONS

CURRENT REV DESC: MX64 - 1x3 CVP PNs added

EC NO: CO-000021437
DRWN: Mario Gazca 07-Oct-2024
CHK'D: MAURICIO RUIZ 27-Feb-2025
APPR: Brittney Cotter 12-Mar-2025

INITIAL REVISION:
DRWN: RFC_PLMIMP 01-Mar-2004
APPR: PBERG 30-Sep-2004

molex

0.64 USCAR CONNECTOR
SEALED SINGLE ROW ASSEMBLY

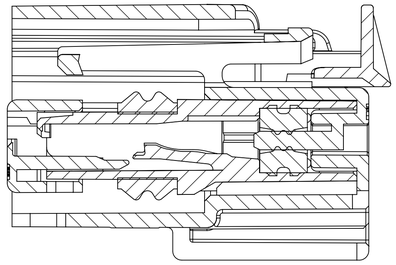
PRODUCT CUSTOMER DRAWING

DOCUMENT NUMBER	DOC TYPE	DOC PART	REVISION
SD-31402-211	PSD	001	U8

THIRD ANGLE PROJECTION	DRAWING	SERIES	MATERIAL NUMBER	CUSTOMER	SHEET NUMBER
	D-SIZE	31402		GENERAL MARKET	2 OF 8

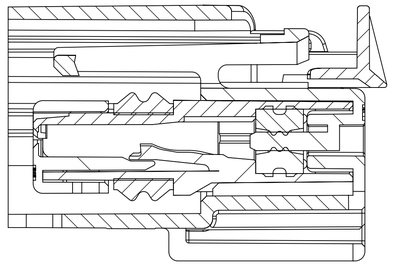
DOCUMENT STATUS: Production | RELEASE DATE: 12-Mar-2025 02:34:41

CONNECTOR ASSEMBLY WITH CLIPSLOT



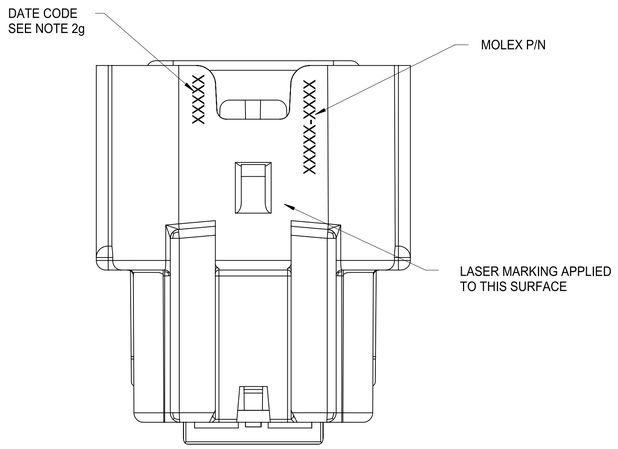
SECTION C-C

TPA SHOWN IN AS-SHIPPED
PRE-LOCKED POSITION
SEE NOTE 1c

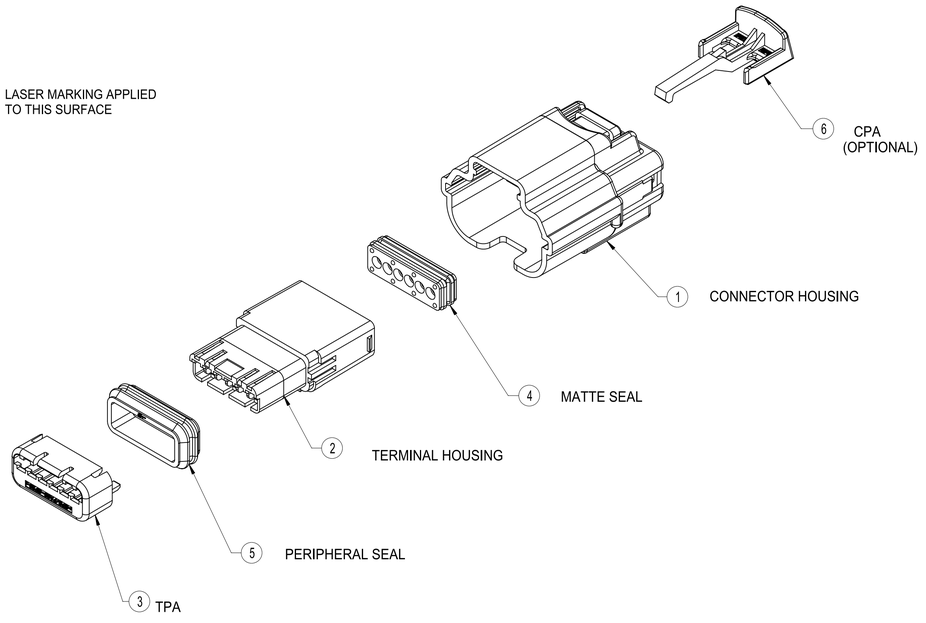


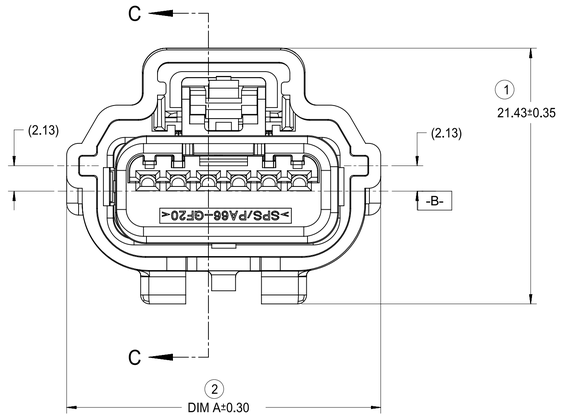
SECTION C-C

TPA SHOWN IN FINAL
LOCKED POSITION



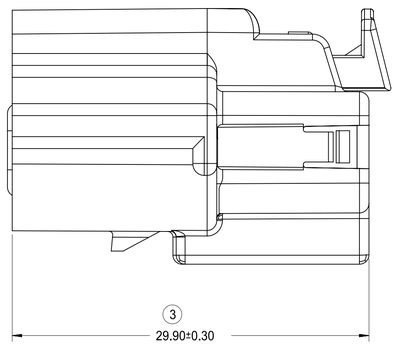
BOTTOM VIEW



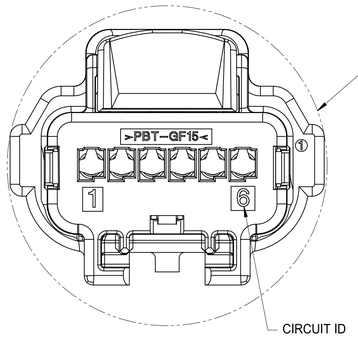


FRONT VIEW

POLARIZATION A



RIGHT SIDE VIEW



BACK VIEW

ITEM	DESCRIPTION	COLOR	MATERIAL
1	CONNECTOR HOUSING	SEE CHART	PBT GF15
2	TERMINAL HOUSING	BLACK	SPS/PA66 GF30
3	TPA	NATURAL	SPS/PA66 GF20
4	MATTE SEAL	SEE CHART	SILICONE RUBBER
5	PERIPHERAL SEAL	SEE CHART	SILICONE RUBBER
6	CPA - OPTIONAL	RED	PBT GF30

THIS DRAWING CONTAINS INFORMATION THAT IS PROPRIETARY TO MOLEX ELECTRONIC TECHNOLOGIES, LLC AND SHOULD NOT BE USED WITHOUT WRITTEN PERMISSION

FUNCTIONAL SYMBOLS
FA = 0
FC = 0
FP = 0
DIVISIONAL SYMBOLS

DIMENSION UNITS	SCALE
MM	1:1

GENERAL TOLERANCES (UNLESS SPECIFIED)

ANGULAR TOL	±	3 °
4 PLACES	±	0
3 PLACES	±	0
2 PLACES	±	0.13
1 PLACE	±	0.3
0 PLACES	±	0

DRAFT WHERE APPLICABLE MUST REMAIN WITHIN DIMENSIONS

CURRENT REV DESC: MX64 - 1x3 CVP PNs added

EC NO: CO-000021437
DRWN: Mario Gazca 07-Oct-2024
CHK'D: MAURICIO RUIZ 27-Feb-2025
APPR: Brittney Cotter 12-Mar-2025

INITIAL REVISION:
DRWN: RFC_PLMIMP 01-Mar-2004
APPR: PBERG 30-Sep-2004

THIRD ANGLE PROJECTION | DRAWING: D-SIZE | SERIES: 31402

molex

0.64 USCAR CONNECTOR
SEALED SINGLE ROW ASSEMBLY

PRODUCT CUSTOMER DRAWING

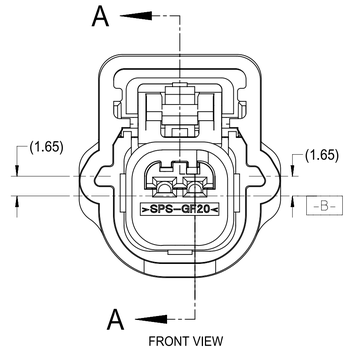
DOCUMENT NUMBER	DOC TYPE	DOC PART	REVISION
SD-31402-211	PSD	001	U8

MATERIAL NUMBER	CUSTOMER	SHEET NUMBER
	GENERAL MARKET	3 OF 8

DOCUMENT STATUS | Production | RELEASE DATE | 12-Mar-2025 02:34:41

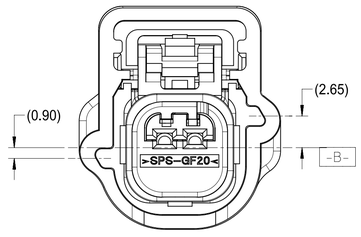
TEMPLATE: molex-illustrator
REVISION: 2
DATE: 2020/01/16

1X2

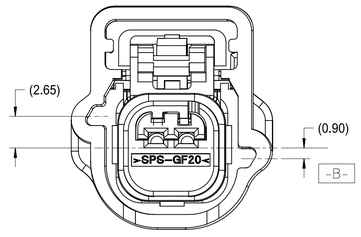


FRONT VIEW

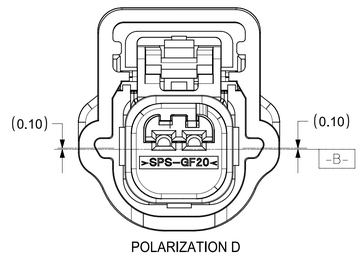
POLARIZATION A



POLARIZATION B

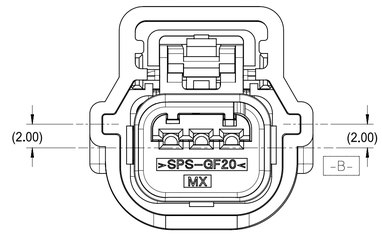


POLARIZATION C

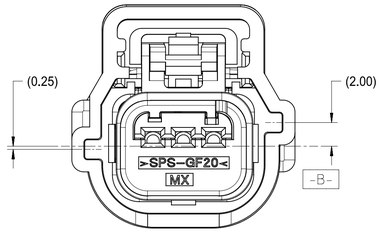


POLARIZATION D

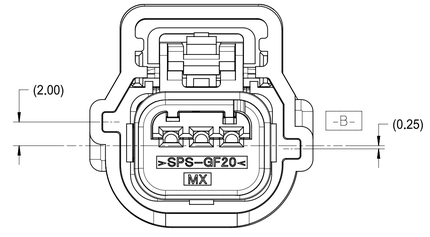
1X3



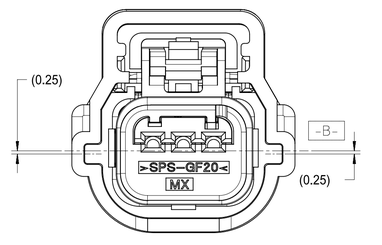
POLARIZATION A



POLARIZATION B

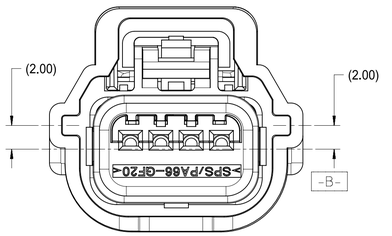


POLARIZATION C



POLARIZATION D

1X4



POLARIZATION A

KEY CONFIGURATIONS

DOCUMENT STATUS	Production	RELEASE DATE	12-Mar-2025 02:34:41

THIS DRAWING CONTAINS INFORMATION THAT IS PROPRIETARY TO MOLEX ELECTRONIC TECHNOLOGIES, LLC AND SHOULD NOT BE USED WITHOUT WRITTEN PERMISSION

FUNCTIONAL SYMBOLS
FA = 0
FC = 0
FP = 0

DIVISIONAL SYMBOLS

DIMENSION UNITS	SCALE
MM	1:1

GENERAL TOLERANCES (UNLESS SPECIFIED)

ANGULAR TOL	±	3 °
4 PLACES	±	0
3 PLACES	±	0
2 PLACES	±	0.13
1 PLACE	±	0.3
0 PLACES	±	0

DRAFT WHERE APPLICABLE MUST REMAIN WITHIN DIMENSIONS

CURRENT REV DESC: MX64 - 1x3 CVP PNs added

EC NO: CO-000021437
DRWN: Mario Gazca 07-Oct-2024
CHK'D: MAURICIO RUIZ 27-Feb-2025
APPR: Brittney Cotter 12-Mar-2025

INITIAL REVISION:
DRWN: RFC_PLMIMP 01-Mar-2004
APPR: PBERG 30-Sep-2004

molex

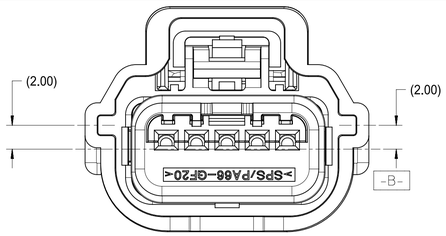
0.64 USCAR CONNECTOR
SEALED SINGLE ROW ASSEMBLY

PRODUCT CUSTOMER DRAWING

DOCUMENT NUMBER	DOC TYPE	DOC PART	REVISION
SD-31402-211	PSD	001	U8

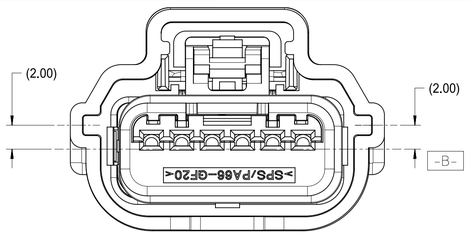
THIRD ANGLE PROJECTION	DRAWING	SERIES	MATERIAL NUMBER	CUSTOMER	SHEET NUMBER
	D-SIZE	31402		GENERAL MARKET	4 OF 8

1X5

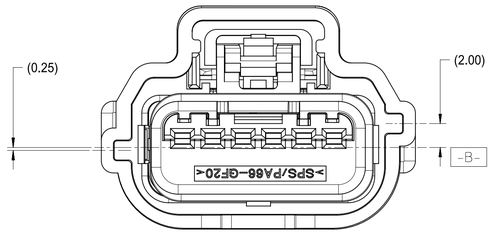


POLARIZATION A

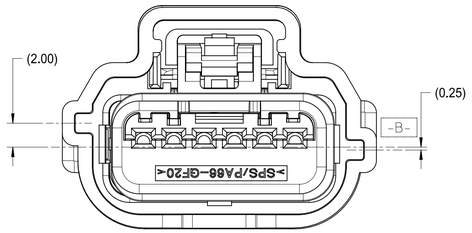
1X6



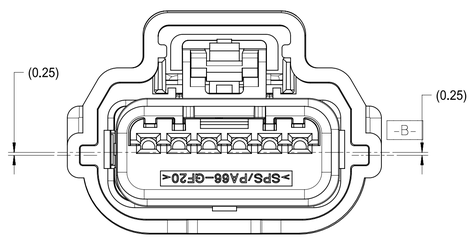
POLARIZATION A



POLARIZATION B

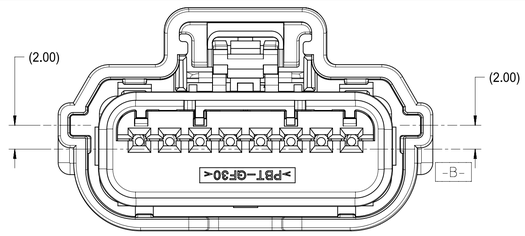


POLARIZATION C

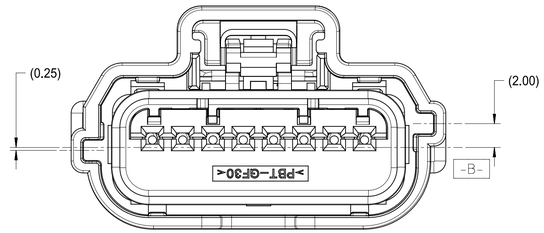


POLARIZATION D

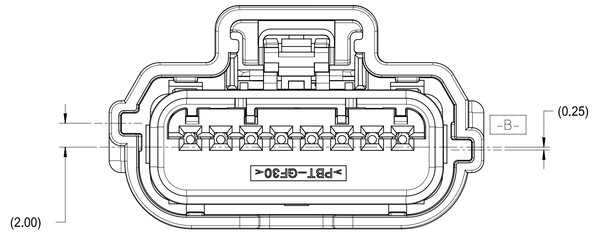
1X8



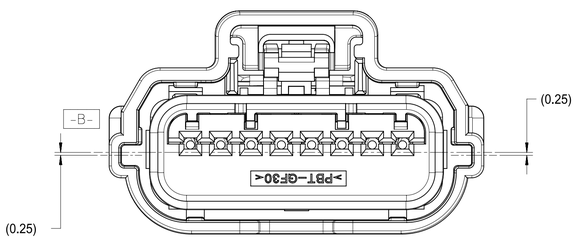
POLARIZATION A



POLARIZATION B



POLARIZATION C



POLARIZATION D

KEY CONFIGURATIONS

DOCUMENT STATUS	Production	RELEASE DATE	12-Mar-2025	02:34:41

FORMAT: molex-ilusmc2
REVISION: J
DATE: 2020/01/16

FUNCTIONAL SYMBOLS
FA = 0
FC = 0
FP = 0
DIVISIONAL SYMBOLS

THIS DRAWING CONTAINS INFORMATION THAT IS PROPRIETARY TO MOLEX ELECTRONIC TECHNOLOGIES, LLC AND SHOULD NOT BE USED WITHOUT WRITTEN PERMISSION

DIMENSION UNITS	SCALE
MM	1:1

GENERAL TOLERANCES (UNLESS SPECIFIED)

ANGULAR TOL	±	3 °
4 PLACES	±	0
3 PLACES	±	0
2 PLACES	±	0.13
1 PLACE	±	0.3
0 PLACES	±	0

DRAFT WHERE APPLICABLE MUST REMAIN WITHIN DIMENSIONS

CURRENT REV DESC: MX64 - 1x3 CVP PNs added

EC NO: CO-000021437
DRWN: Mario Gazca 07-Oct-2024
CHK'D: MAURICIO RUIZ 27-Feb-2025
APPR: Brittney Cotter 12-Mar-2025

INITIAL REVISION:
DRWN: RFC_PLMIMP 01-Mar-2004
APPR: PBERG 30-Sep-2004

molex

0.64 USCAR CONNECTOR
SEALED SINGLE ROW ASSEMBLY

PRODUCT CUSTOMER DRAWING

DOCUMENT NUMBER	DOC TYPE	DOC PART	REVISION
SD-31402-211	PSD	001	U8

THIRD ANGLE PROJECTION	DRAWING	SERIES	MATERIAL NUMBER	CUSTOMER	SHEET NUMBER
	D-SIZE	31402		GENERAL MARKET	5 OF 8

PART NUMBER WITHOUT CPA	PART NUMBER WITH CPA	CLIPSLOT OPTION	ROW/ CIRCUITS	KEY*	MATTE SEAL COLOR	PERIMETER SEAL COLOR	CONNECTOR COLOR	WIDTH DIM (A)	MIN. PASS THRU DIA.	FEMALE TERMINAL SUPPLIER	USCAR FOOTPRINT DRAWING NO.	STATUS	
31402-2100	31402-2110	NO	1 X 2	A	ROYAL BLUE	BLUE	BLACK	16.88	(20.80)	TYCO OR MOLEX GET 0.64	064-S-002-1-Z02	SALEABLE	
31402-2200	31402-2210			B			GRAY					SALEABLE	
31402-2500	31402-2510			B			BLACK					SALEABLE	
31402-2600	31402-2610			C			BLACK					SALEABLE	
31402-2700	31402-2710			D			BLACK					SALEABLE	
31403-2000	31403-2010			D			DK. GRAY			MOLEX 0.64		SALEABLE	L
31403-2100	31403-2110			A			BLACK					SALEABLE	
31403-2200	31403-2210			B			GRAY					SALEABLE	
31403-2500	31403-2510			B			BLACK					SALEABLE	L
31403-2600	31403-2610			C			BLACK					SALEABLE	
31403-2700	31403-2710			D			BLACK					SALEABLE	
31403-2800	31403-2810			C			NATURAL					SALEABLE	L
31403-2900	31403-2910			D			GRAY					SALEABLE	
31404-2100	31404-2110			A			BLACK			YAZAKI KAIZEN 0.64 TE GEN Y 0.64 JST AIT 0.64		NOT TOOLED	
31404-2200	31404-2210			B			GRAY					NOT TOOLED	
31404-2300	31404-2310			C			BROWN					NOT TOOLED	
31404-2400	31404-2410			D			GREEN					NOT TOOLED	
31404-2500	31404-2510			B			BLACK					NOT TOOLED	
31404-2600	31404-2610			C			BLACK					NOT TOOLED	
31404-2700	31404-2710			D			BLACK					NOT TOOLED	
31402-3100	31402-3110	NO	1 X 3	A	LIGHT BLUE	RUST RED	BLACK	18.70	(22.00)	TYCO OR MOLEX GET 0.64	064-S-003-1-Z01	SALEABLE	
31402-3200	31402-3210			B			GRAY					SALEABLE	
31402-3500	31402-3510			B			BLACK					SALEABLE	
31402-3600	31402-3610			C			BLACK					SALEABLE	
31402-3700	31402-3710			D			BLACK					SALEABLE	
31403-3000	31403-3010			D			DK. GRAY			MOLEX 0.64		SALEABLE	L
31403-3100	31403-3110			A			BLACK					SALEABLE	
31403-3200	31403-3210			B			GRAY					SALEABLE	
31403-3500	31403-3510			B			BLACK					SALEABLE	
31403-3600	31403-3610			C			BLACK					SALEABLE	
31403-3700	31403-3710			D			BLACK					SALEABLE	
31403-3800	31403-3810			C			NATURAL					SALEABLE	L
31404-3100	31404-3110			A			BLACK			YAZAKI KAIZEN 0.64 TE GEN Y 0.64 JST AIT 0.64		SALEABLE	
31404-3200	31404-3210			B			GRAY					SALEABLE	
31404-3500	31404-3510			B			BLACK					SALEABLE	
31404-3600	31404-3610			C			BLACK					SALEABLE	
31404-3700	31404-3710			D			BLACK					SALEABLE	
31402-4100	31402-4110	NO	1 X 4	A	TBD	TBD	BLACK	21.25	(22.34)	TYCO OR MOLEX GET 0.64	064-S-004-1-Z02	NOT TOOLED	
31402-4200	31402-4210			B			GRAY					NOT TOOLED	
31402-4300	31402-4310			C			BROWN					NOT TOOLED	
31402-4400	31402-4410			D			GREEN					NOT TOOLED	
31402-4500	31402-4510			B			BLACK					NOT TOOLED	
31402-4600	31402-4610			C			BLACK					NOT TOOLED	
31402-4700	31402-4710			D			BLACK					NOT TOOLED	
31403-4100	31403-4110			A			BLACK			MOLEX 0.64		NOT TOOLED	
31403-4200	31403-4210			B			GRAY					NOT TOOLED	
31403-4300	31403-4310			C			BROWN					NOT TOOLED	
31403-4400	31403-4410			D			GREEN					NOT TOOLED	
31403-4500	31403-4510			B			BLACK					NOT TOOLED	
31403-4600	31403-4610			C			BLACK					NOT TOOLED	
31403-4700	31403-4710			D			BLACK					NOT TOOLED	
31404-4100	31404-4110			A			BLACK			YAZAKI KAIZEN 0.64 TE GEN Y 0.64 JST AIT 0.64		NOT TOOLED	
31404-4200	31404-4210			B			GRAY					NOT TOOLED	
31404-4300	31404-4310			C			BROWN					NOT TOOLED	
31404-4400	31404-4410			D			GREEN					NOT TOOLED	
31404-4500	31404-4510			B			BLACK					NOT TOOLED	
31404-4600	31404-4610			C			BLACK					NOT TOOLED	
31404-4700	31404-4710			D			BLACK					NOT TOOLED	

DOCUMENT STATUS | Production | RELEASE DATE | 12-Mar-2025 02:34:41

THIS DRAWING CONTAINS INFORMATION THAT IS PROPRIETARY TO MOLEX ELECTRONIC TECHNOLOGIES, LLC AND SHOULD NOT BE USED WITHOUT WRITTEN PERMISSION

FUNCTIONAL SYMBOLS
FA = 0
FC = 0
FP = 0
DIVISIONAL SYMBOLS

DIMENSION UNITS	SCALE
MM	1:1

GENERAL TOLERANCES (UNLESS SPECIFIED)

ANGULAR TOL	±	3 °
4 PLACES	±	0
3 PLACES	±	0
2 PLACES	±	0.13
1 PLACE	±	0.3
0 PLACES	±	0

DRAFT WHERE APPLICABLE MUST REMAIN WITHIN DIMENSIONS

CURRENT REV DESC: MX64 - 1x3 CVP PNs added

EC NO: CO-000021437
DRWN: Mario Gazca 07-Oct-2024
CHK'D: MAURICIO RUIZ 27-Feb-2025
APPR: Brittney Cotter 12-Mar-2025
INITIAL REVISION:
DRWN: RFC_PLMIMP 01-Mar-2004
APPR: PBERG 30-Sep-2004

molex

0.64 USCAR CONNECTOR
SEALED SINGLE ROW ASSEMBLY

PRODUCT CUSTOMER DRAWING

DOCUMENT NUMBER	DOC TYPE	DOC PART	REVISION
SD-31402-211	PSD	001	U8

THIRD ANGLE PROJECTION	DRAWING	SERIES	MATERIAL NUMBER	CUSTOMER	SHEET NUMBER
	D-SIZE	31402		GENERAL MARKET	6 OF 8

PART NUMBER WITHOUT CPA	PART NUMBER WITH CPA	CLIPSLOT OPTION	ROW/ CIRCUITS	KEY*	MATTE SEAL COLOR	PERIMETER SEAL COLOR	CONNECTOR COLOR	WIDTH DIM (A)	MIN. PASS THRU DIA.	FEMALE TERMINAL SUPPLIER	USCAR FOOTPRINT DRAWING NO.	STATUS
31402-5100	31402-5110	NO	1 X 5	A	TBD	TBD	BLACK	23.80	(24.28)	TYCO OR MOLEX GET 0.64	064-S-005-1-Z02	NOT TOOLED
31402-5200	31402-5210			B			GRAY					NOT TOOLED
31402-5300	31402-5310			C			BROWN					NOT TOOLED
31402-5400	31402-5410			D			GREEN					NOT TOOLED
31402-5500	31402-5510			B			BLACK					NOT TOOLED
31402-5600	31402-5610			C			BLACK					NOT TOOLED
31402-5700	31402-5710			D			BLACK					NOT TOOLED
31403-5100	31403-5110			A			BLACK			MOLEX 0.64		NOT TOOLED
31403-5200	31403-5210			B			GRAY					NOT TOOLED
31403-5300	31403-5310			C			BROWN					NOT TOOLED
31403-5400	31403-5410			D			GREEN					NOT TOOLED
31403-5500	31403-5510			B			BLACK					NOT TOOLED
31403-5600	31403-5610			C			BLACK					NOT TOOLED
31403-5700	31403-5710			D			BLACK					NOT TOOLED
31404-5100	31404-5110			A			BLACK			YAZAKI KAIZEN 0.64 TE GEN Y 0.64 JST AIT 0.64		NOT TOOLED
31404-5200	31404-5210			B			GRAY					NOT TOOLED
31404-5300	31404-5310			C			BROWN					NOT TOOLED
31404-5400	31404-5410			D			GREEN					NOT TOOLED
31404-5500	31404-5510			B			BLACK					NOT TOOLED
31404-5600	31404-5610			C			BLACK					NOT TOOLED
31404-5700	31404-5710			D			BLACK					NOT TOOLED
31402-6100	31402-6110	NO	1 X 6	A	ROYAL BLUE	LIGHT BLUE	BLACK	26.33	(26.82)	TYCO OR MOLEX GET 0.64	064-S-006-1-Z02	SALEABLE
31402-6200	31402-6210			B			GRAY					SALEABLE
31402-6500	31402-6510			B			BLACK					SALEABLE
31402-6600	31402-6610			C			BLACK					SALEABLE
31402-6700	31402-6710			D			BLACK					SALEABLE
(U6) 31402-6001	31402-6004			A			GRAY					SALEABLE
(U6) 31402-6002	31402-6005			C			GRAY					SALEABLE
(U6) 31402-6003	31402-6006			D			GRAY					SALEABLE
31403-6100	31403-6110			A			BLACK			MOLEX 0.64		SALEABLE
31403-6200	31403-6210			B			GRAY					SALEABLE
31403-6500	31403-6510			B			BLACK					SALEABLE
31403-6600	31403-6610			C			BLACK					SALEABLE
31403-6700	31403-6710			D			BLACK					SALEABLE
(U6) 31403-6001	31403-6004			A			GRAY					SALEABLE
(U6) 31403-6002	31403-6005			C			GRAY					SALEABLE
(U6) 31403-6003	31403-6006			D			GRAY					SALEABLE
31404-7100	31404-7110			A			BLACK			YAZAKI KAIZEN 0.64 TE GEN Y 0.64 JST AIT 0.64		SALEABLE
31404-7200	31404-7210			B			GRAY					SALEABLE
31404-7500	31404-7510			B			BLACK					SALEABLE
31404-7600	31404-7610			C			BLACK					SALEABLE
31404-7700	31404-7710			D			BLACK					SALEABLE
31404-7800	31404-7810			C			NATURAL					SALEABLE
(U6) 31404-7001	31404-7007			A			GRAY					SALEABLE
(U6) 31404-7002	31404-7008			C			GRAY					SALEABLE
(U6) 31404-7003	31404-7009			D			GRAY					SALEABLE
(U6) 31404-7004	31404-7010			A			NATURAL					SALEABLE
(U6) 31404-7005	31404-7011			B			NATURAL					SALEABLE
(U6) 31404-7006	31404-7012			D			NATURAL					SALEABLE

FUNCTIONAL SYMBOLS
FA = 0
FC = 0
FP = 0
DIVISIONAL SYMBOLS

THIS DRAWING CONTAINS INFORMATION THAT IS PROPRIETARY TO MOLEX ELECTRONIC TECHNOLOGIES, LLC AND SHOULD NOT BE USED WITHOUT WRITTEN PERMISSION

DIMENSION UNITS	SCALE
MM	1:1

GENERAL TOLERANCES (UNLESS SPECIFIED)

ANGULAR TOL	±	3 °
4 PLACES	±	0
3 PLACES	±	0
2 PLACES	±	0.13
1 PLACE	±	0.3
0 PLACES	±	0

DRAFT WHERE APPLICABLE MUST REMAIN WITHIN DIMENSIONS

CURRENT REV DESC: MX64 - 1x3 CVP PNs added

EC NO: CO-000021437
DRWN: Mario Gazca 07-Oct-2024
CHK'D: MAURICIO RUIZ 27-Feb-2025
APPR: Brittney Cotter 12-Mar-2025

INITIAL REVISION:
DRWN: RFC_PLMIMP 01-Mar-2004
APPR: PBERG 30-Sep-2004

THIRD ANGLE PROJECTION | DRAWING: D-SIZE | SERIES: 31402

molex

0.64 USCAR CONNECTOR
SEALED SINGLE ROW ASSEMBLY

PRODUCT CUSTOMER DRAWING

DOCUMENT NUMBER	DOC TYPE	DOC PART	REVISION
SD-31402-211	PSD	001	U8

MATERIAL NUMBER	CUSTOMER	SHEET NUMBER
	GENERAL MARKET	7 OF 8

DOCUMENT STATUS | Production | RELEASE DATE | 12-Mar-2025 02:34:41

FORMAT: master-format-D
VERSION: 1.0
DATE: 2020/01/14

ADDITIONAL CAVITY PLUG CONFIGURATIONS:

ROW/ CIRCUITS	FEMALE TERMINAL	MOLEX P/N WITH CPA	MOLEX P/N WITHOUT CPA	KEY OPTION	CLIPSLOT OPTION	COLOR	CIRCUIT NUMBER: "0" INDICATED PLUG LOCATION						TOTAL CIRCUITS PLUGGED	STATUS	
							1	2	3	4	5	6			
1X6	TYCO/MOLEX GET	31402-6110	31402-6100	A	NO	BLACK							0	SALEABLE	
		31402-6111	31402-6101	A	NO	BLACK	0	0	0	0	0	0	6	SALEABLE	
		31402-6112	31402-6102	A	NO	BLACK	0	0					2	SALEABLE	
		31402-6113	31402-6103	A	NO	BLACK		0					1	SALEABLE	
		31402-6114	31402-6104	A	NO	BLACK	0	0	0	0			4	SALEABLE	
		31402-6115	31402-6105	A	NO	BLACK			0		0	0	3	SALEABLE	
		31402-6118	31402-6108	A	NO	BLACK					0		1	SALEABLE	
		31402-6119	31402-6109	A	NO	BLACK			0				1	SALEABLE	
		31402-6131	31402-6121	A	NO	BLACK				0			1	SALEABLE	(S)
		31402-6132	31402-6122	A	NO	BLACK	0	0	0				3	SALEABLE	(U5)
		31402-6133	31402-6123	A	NO	BLACK				0	0	0	3	SALEABLE	(U5)
		31402-6150	31402-6140	A	YES	BLACK							0	SALEABLE	
		31402-6211	31402-6201	B	NO	GRAY	0	0	0	0	0	0	6	SALEABLE	(T4)
		31402-6511	31402-6501	B	NO	BLACK	0	0	0	0	0	0	6	SALEABLE	(T4)
		31402-6611	31402-6601	C	NO	BLACK	0	0	0	0	0	0	6	SALEABLE	(T4)
		31402-6711	31402-6701	D	NO	BLACK	0	0	0	0	0	0	6	SALEABLE	(T4)
		31402-6134	31402-6124	A	NO	BLACK	0	0			0	0	4	SALEABLE	(U7)
	MOLEX 0.64	31403-6110	31403-6100	A	NO	BLACK							0	SALEABLE	
		31403-6111	31403-6101	A	NO	BLACK	0	0	0	0	0	0	6	SALEABLE	
		31403-6112	31403-6102	A	NO	BLACK			0				1	SALEABLE	
		31403-6113	31403-6103	A	NO	BLACK	0	0	0		0		4	SALEABLE	
		31403-6114	31403-6104	A	NO	BLACK					0	0	2	SALEABLE	
		31403-6115	31403-6105	A	NO	BLACK			0		0	0	3	SALEABLE	(U5)
		31403-6211	31403-6201	B	NO	GRAY	0	0	0	0	0	0	6	SALEABLE	(T4)
		31403-6212	31403-6202	B	NO	GRAY				0	0	0	3	SALEABLE	
		31403-6511	31403-6501	B	NO	BLACK	0	0	0	0	0	0	6	SALEABLE	(T4)
		31403-6512	31403-6502	B	NO	BLACK				0			1	SALEABLE	(U5)
		31403-6611	31403-6601	C	NO	BLACK	0	0	0	0	0	0	6	SALEABLE	(T4)
		31403-6711	31403-6701	D	NO	BLACK	0	0	0	0	0	0	6	SALEABLE	(T4)
	YAZAKI KAIZEN 0.64 TE GEN Y 0.64 JST AIT 0.64	31404-7110	31404-7100	A	NO	BLACK							0	SALEABLE	
		31404-7111	31404-7101	A	NO	BLACK	0	0	0	0	0	0	6	SALEABLE	
		31404-7112	31404-7102	A	NO	BLACK	0		0				2	SALEABLE	
		31404-7113	31404-7103	A	NO	BLACK	0					0	2	SALEABLE	
		31404-7116	31404-7106	A	NO	BLACK						0	1	SALEABLE	
		31404-7117	31404-7107	A	NO	BLACK	0		0			0	3	SALEABLE	
		31404-7118	31404-7108	A	NO	BLACK	0						1	SALEABLE	
		31404-7119	31404-7109	A	NO	BLACK			0		0	0	3	SALEABLE	
		31404-7132	31404-7122	A	NO	BLACK			0				1	SALEABLE	
		31404-7133	31404-7123	A	NO	BLACK		0					1	SALEABLE	(T5)
		31404-7134	31404-7124	A	NO	BLACK				0		0	2	SALEABLE	(T6)
		31404-7135	31404-7125	A	NO	BLACK		0		0			2	SALEABLE	(T7)
		31404-7136	31404-7126	A	NO	BLACK				0	0		2	SALEABLE	(U2)
		31404-7213	31404-7203	B	NO	GRAY	0					0	2	SALEABLE	
		31404-7214	31404-7204	B	NO	GRAY						0	1	SALEABLE	(T6)
		31404-7215	31404-7205	B	NO	GRAY		0					1	SALEABLE	(T7)
		31404-7216	31404-7206	B	NO	GRAY		0			0	0	3	SALEABLE	
		31404-7812	31404-7802	C	NO	NATURAL				0	0	0	3	SALEABLE	(T6)
		31404-7813	31404-7803	C	NO	NATURAL		0					1	SALEABLE	(T8)
		31404-7814	31404-7804	C	NO	NATURAL		0			0	0	3	SALEABLE	(T5)
		31404-7912	31404-7902	D	NO	GRAY		0					1	SALEABLE	(T7)
		31404-7913	31404-7903	D	NO	GRAY		0		0			2	SALEABLE	
1X2	TYCO/MOLEX GET	31402-2111	31402-2101	A	NO	BLACK	0	0					2	SALEABLE	(U7)
1X3	TYCO/MOLEX GET	31402-3113	31402-3103	A	NO	BLACK			0				1	SALEABLE	
		31402-3114	31402-3104	A	NO	BLACK	0						1	SALEABLE	(T4)
		31402-3115	31402-3105	A	NO	BLACK		0					1	SALEABLE	(U1)
	MOLEX 0.64	31403-3132	31403-3122	A	NO	GRAY		0					1	SALEABLE	(P)
		31403-3112	31403-3102	A	NO	BLACK		0					1	SALEABLE	(U8)
	YAZAKI KAIZEN 0.64, TE GEN Y 0.64,JST AIT 0.64	31404-3112	31404-3102	A	NO	BLACK		0					1	SALEABLE	(R)

THIS DRAWING CONTAINS INFORMATION THAT IS PROPRIETARY TO MOLEX ELECTRONIC TECHNOLOGIES, LLC AND SHOULD NOT BE USED WITHOUT WRITTEN PERMISSION

FUNCTIONAL SYMBOLS
FA = 0
FC = 0
FF = 0
DIVISIONAL SYMBOLS

DIMENSION UNITS: MM
SCALE: 1:1

GENERAL TOLERANCES (UNLESS SPECIFIED)

ANGULAR TOL	± 3 °
4 PLACES	± 0
3 PLACES	± 0
2 PLACES	± 0.13
1 PLACE	± 0.3
0 PLACES	± 0

DRAFT WHERE APPLICABLE MUST REMAIN WITHIN DIMENSIONS

CURRENT REV DESC: MX64 - 1x3 CVP PNs added

EC NO: CO-000021437
DRWN: Mario Gazca 07-Oct-2024
CHK'D: MAURICIO RUIZ 27-Feb-2025
APPR: Brittney Cotter 12-Mar-2025

INITIAL REVISION:
DRWN: RFC_PLMIMP 01-Mar-2004
APPR: PBERG 30-Sep-2004

molex

0.64 USCAR CONNECTOR
SEALED SINGLE ROW ASSEMBLY

PRODUCT CUSTOMER DRAWING

DOCUMENT NUMBER	DOC TYPE	DOC PART	REVISION
SD-31402-211	PSD	001	U8

THIRD ANGLE PROJECTION	DRAWING	SERIES	MATERIAL NUMBER	CUSTOMER	SHEET NUMBER
	D-SIZE	31402		GENERAL MARKET	8 OF 8

DOCUMENT STATUS: Production | RELEASE DATE: 12-Mar-2025 02:34:41